Improvement of Organic Fresh Milk System through Willingness to Purchase: A Comparison between Thailand and Japan

Jeerawan Punwaree, Natt Leelawat, *Member*, *IAENG*, Jing Tang, *Member*, *IAENG*,
Ampan Laosunthara and Takumi Ohashi

***Abstract*—Organic fresh milk has higher nutrition than conventional milk, with the former consisting of n-3 fatty acids, iron, carotenoid, less iodine, and high protein. These are the results of organic farming, which is different from traditional agriculture in terms of farm preparation, feed, dairy health, and organic milk processing standards. However, there are limited studies in Thailand and Japan on organic fresh milk from the customer perspective to support one function of the organic fresh milk system. This study aims to fill in this gap. Researchers conducted the developed questionnaires with 418 samples in Thailand and 432 samples in Japan. This study examines attitudes toward behavior, subjective norms, and perceived behavioral control of willingness to purchase organic fresh milk. The collected data was analyzed using a Partial Least Squares Structural Equation Model. The results showed that attitudes toward behavior and subjective norms are associated with willingness to purchase organic fresh milk. Package labeling also has a strong influence on perception. Especially during the COVID-19 crisis, healthy consumption and lifestyle had a positive effect toward the purchase of organic fresh milk. Social media also affects subjective norms correlated with willingness to purchase such milk. However, one's perceived behavioral control for willingness to purchase organic fresh milk in Thailand is not significant, whereas in Japan it is.**

***Index Terms*—Intention factors, organic fresh milk, theory of planned behavior (TPB), willingness to purchase (WTP)**

I. INTRODUCTION

THE Dairy Farming Promotion Organization of Thailand (DPO) is a state entity that works under the Ministry of Agriculture and Cooperation in the royal decree. "The DPO describes organic milk as milk farmed with the environment and animal welfare in mind." This is very beneficial for sensitive groups; for example, children and older people are allergic to conventional milk, but they still need the essential nutrients [1]. Currently, Thailand has 14 organic milk farms observing standards set by the Department of Livestock Development (DLD) with logos showing "DLD ORGANIC THAILAND" certification as of November 2020. The Ministry of Agriculture and Cooperatives reported that the farms in Saraburi Province and Nakhon Ratchasima Province, located in northeastern Thailand, can produce 5,000 kilograms of dairy products per day with limited brand promotion in the country. At present, only supermarkets and green markets can sell the products. Japan uses the Organic Japanese Agricultural Standard (JAS). JAS is a label that was established by the Ministry of Agriculture, Forestry and Fisheries (MAFF). In addition, there are certified companies in Sapporo, Asahikawa (Hokkaido Region), and Gunma Prefecture that produce organic milk.

In terms of the study of organic fresh milk systems, we are interested in examining them from a customer perspective. However, studies on the intention or willingness to buy organic milk are limited in both Thailand and Japan. This research would therefore be helpful to inform marketing management strategies for stakeholders and the government. This study will be an advantage for willingness factors regarding the purchase of organic fresh milk in the two countries.

Willingness to purchase (WTP) is selected to apply for this study. Following our review, a study in Japan found that attitude and social norms affected consumers' purchase of Animal Welfare Friendly Beef Products [2]. Paopid et al. found that the height and duration of flooding, housing prices, and flood damage were all key factors that affected WTP for flood insurance [3]. Moreover, regarding studies of willingness to pay for renewable electricity, a contingent valuation study in Turkey found that environmental conscience, membership in an environmental organization, age, education level, gender, and household income significantly impacted WTP [4].

This study is organized as follows. Section 1 explains the background. Section 2 provides a literature review regarding the theory and hypotheses of this study. Section 3 presents the research model and data collection. Section 4 summarizes the survey results, and in Section 5, conclusions are presented.

Manuscript received July 22, 2021; revised September 13, 2021. This study is partly supported by the Center of Innovation Program of the Japan Science and Technology Agency (Grant Number: JPMJCE1309).

J. Punwaree is a master's student of the Department of Industrial Engineering, Faculty of Engineering, Chulalongkorn University, Bangkok 10330, Thailand (e-mail: jpunwaree@gmail.com).

N. Leelawat is an Assistant Professor of the Department of Industrial Engineering, Faculty of Engineering; Disaster and Risk Management Information Systems Research Group, Chulalongkorn University, Bangkok 10330, Thailand (e-mail: natt.l@chula.ac.th).

J. Tang is a Lecturer of the International School of Engineering, Faculty of Engineering; Disaster and Risk Management Information Systems Research Group, Chulalongkorn University, Bangkok 10330, Thailand (e-mail: jing.t@chula.ac.th).

A. Laosunthara is a Researcher of the Disaster and Risk Management Information Systems Research Group, Chulalongkorn University, Bangkok 10330, Thailand (e-mail: ampan13275@gmail.com).

T. Ohashi is an Assistant Professor of the Department of Transdisciplinary Science and Engineering, Tokyo Institute of Technology, Tokyo, Japan (e-mail: ohashi.t.af@m.titech.ac.jp).

II. LITERATURE REVIEW

A. Theory of Planned Behavior (TPB) and related factors

According to TPB, human behavior is guided by three main factors, attitude to behavior (AB), subjective norms (SN), and perceived behavioral control (PBC), which influence intentions toward behaviors [5]. The results of intentions can be a tendency toward consumer behavior of expectation to pay. However, the relationship between TPB and willingness to pay for organic food is ambiguous. We discovered that they used consumer questionnaire survey samples. They applied the TPB model to their research. For example, a study in Bangkok, Thailand, examined the factors influencing people's attitudes toward organic foods [6]. Another study reviewed organic food purchases in Sa Kaeo Province, Thailand. According to the findings, subjective norms, environmental protection, label trust, food quality, availability, and convenience stores are all significant factors in the purchase of organic products [7].

Based on previous studies, the potential parameters affecting the willingness to purchase organic products, including subjective norms, environmental protection, label trust, food quality, availability, and convenience stores, are all significant factors in the purchase of organic products.

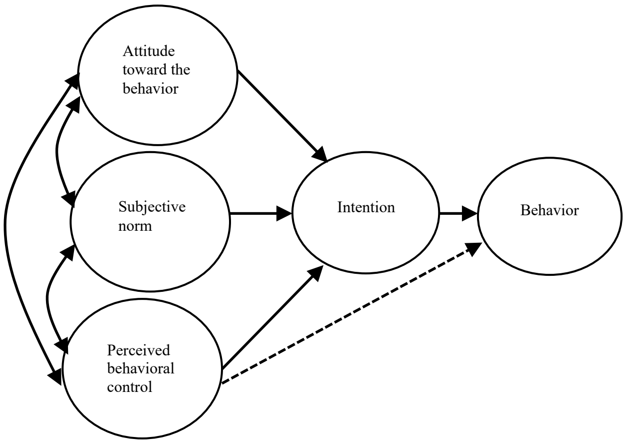

Fig. 1. TPB model [5]
Adaptation with permission from [complete refer- 5143711123125]. Copyright (1991) Published by Elsevier Inc.

Attitude towards behavior (AB)

A person's attitude toward action can be positive or negative. Therefore, attitude can have a significant impact on intention prediction [8]. Previous work also found that attitude towards organic yogurt increases organic yogurt consumption (consumer attitudes, knowledge) [9]. Thus, the following hypothesis is proposed:

H1: Attitude towards behavior increases willingness to purchase organic fresh milk.

Subjective norms (SN)

Subjective norms are people's self-perception concerning expectations from others, such as family members, loved ones, and close friends [10]. For example, Zakata found that family and friends had an impact on organic food selection [11]. As considerable research has been done on organic fresh milk, subjective norms have been formulated, resulting in the following hypothesis.

H2: Subjective norms increase willingness to purchase organic fresh milk.

Perceived behavioral control (PBC)

Capabilities, resources and opportunities contribute to perceived behavioral control but lack comprehension, making it impossible to carry out a specific action [8]. TPB also suggests that perceived behavioral control is the most potent factor influencing behavior change [12]. Hence, the following hypothesis is proposed.

H3: Perceived behavioral control increases willingness to purchase organic fresh milk.

B. Intention factors

Information (INFO)

In general, products certified by the government can gain consumer purchases. Moreover, a consumer also feels confident in the standard of the product. USDA researchers found that consumers chose products based on a label indicating a product was organic and contributed to a healthy lifestyle. Additionally, it has been shown that private labels or government-certified labels are not necessarily influential when it comes to purchasing product [13]. It therefore calls for investigation if the information on the package label affects attitude towards behavior.

H4: Information provided in the package positively affects attitude towards behavior.

Health concerns (HC)

As a rule, a buyer typically chooses to purchase an organic product that mentions its health benefits. A product's value-added nutrition and health benefits may motivate customers to buy it. As a result, this information can be used as a visual reference for people who purchase organic products [14]. Therefore, the following hypothesis developed:

H5: Health concerns have a positive effect on attitude towards behavior.

COVID-19 (COVID)

The situation is critical now because COVID-19 continues to spread globally. In addition, financial losses have resulted from nationwide freezing, which has harmed all sectors of society due to the chain reaction on housing, healthcare, and nutrition [15]. Thus, we should look into the impact of the COVID-19 pandemic on food consumption habits.

H6: COVID-19 has a positive effect on attitude toward behavior.

Social media (SM)

Some people use social media video technology to improve their cooking abilities [16]. At the same time, some social media services provide a form of managed distant connection, with only close friends posting food photos [17]. Nowadays, social media services such as Facebook, Instagram and Twitter allow users to keep in touch continually with close friends and acquaintances. Therefore, the following hypothesis was developed:

H7: Social media has a positive effect on subjective norms.

III. RESEARCH MODEL AND DATA COLLECTION

Seven hypotheses are used in this study to create the proposed research model by starting with the TPB.

A. Research model

All mentioned factors and assumptions are summarized in the research model in Fig. 2.

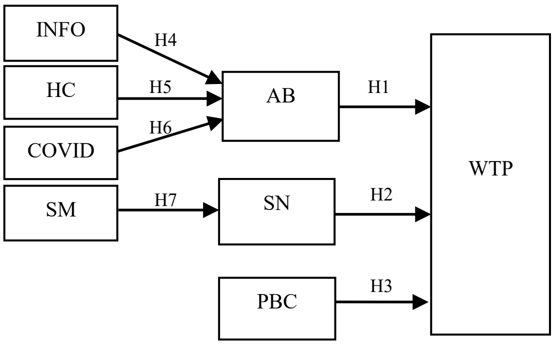

Fig. 2. Proposed research model

B. Questionnaire development

The questionnaire has two languages: the Thai and the Japanese version.

The questionnaire measures (1) open-ended demographics, consisting of screening questions and general information; (2) information provided on the package having a positive effect on attitude toward behavior such as "I compare information labels of the organic products to decide which brand to purchase"; (3) health concerns having a positive effect on attitude toward behavior, for example, "I often eat healthy food"; (4) COVID-19 positive effect on attitude toward behavior, e.g., "COVID-19 has had a positive effect on my willingness to buy healthier food"; (5) Social media positive effect on subjective norms; for example, "I follow health-related best practices on social media in my daily life"; (6) attitude toward behavior; (7) subjective norms; (8) perceived behavioral control; (8) willingness to purchase. All items are presented in TABLE III. A seven-point Likert scale was used, where 1 = strongly disagree, 2 = disagree, 3 = somewhat disagree, 4 = neutral, 5 = somewhat agree, 6 = agree, and 7 = strongly agree.

C. Pilot test

The online pilot questionnaire uses the obtained information to determine reliable and relevant items. The 30 participants in Thailand were categorized into consumers of two types: 15 adults who consumed organic fresh milk and 15 adults who did not. Finally, a summary of the results revealed unclear text, typos, and usage time. The pilot study's findings also help us to assess the final questionnaire.

D. Data collection

Data collection sampled a number population of consumers by Yamane's theory at a 95% confidence level, with Z = 1.96 and expected movement of α = 5%. The study used the sample number to divide the data into Thailand's various provinces, including Bangkok, Khon Kaen, Chonburi, Chiang Mai, Nakhon Ratchasima, and Phuket. In Japan, data was collected from the questionnaires in Tokyo, Osaka, and Aichi.

IV. RESULTS

A. Demographics results

In total, samples of 418 responses in Thailand and 432 in Japan were obtained and used for our analysis. TABLE I and TABLE II show the demographic information of Thai and Japanese respondents, respectively.

TABLE I
SUMMARY OF THAILAND RESPONDENTS' DEMOGRAPHICS

Factor	Variables	Percent
Gender	Male	50.5
	Female	49.5
Age (years)	20–29	24.2
	30–39	29.2
	40–49	26.8
	50–49	16.7
	60–69	3.1
Education	Less than high school	4.1
	High school	13.6
	Vocational / Diploma	13.1
	Bachelor's degree	62.7
	Master's degree / Doctoral degree	6.5
Family annual income	THB 0 – 300,000	33.3
	THB 300,001 – 1,000,000	58.8
	Above THB 1,000,000	7.9
Family members	1 member	4.1
	2 members	12.4
	3 or 4 members	55.5
	5 members or above	28.0
Household location	Bangkok	56.0
	Khon Kaen,	7.0
	Chonburi,	12.0
	Chiang Mai	12.0
	Nakhon Ratchasima	5.0
	Phuket	5.0

Note: THB denotes Thai Baht, the official currency of Thailand

TABLE II
SUMMARY OF JAPAN RESPONDENTS' DEMOGRAPHICS

Factor	Variables	Percent
Gender	Male	50.7
	Female	49.3
Age (years)	20–29	18.8
	30–39	23.1
	40–49	19.9
	50–49	20.1
	60–69	18.1
Education	Less than high school	2.8
	High school	23.1
	Vocational / Diploma	23.4
	Bachelor's degree	45.4
	Master's degree / Doctoral degree	5.3
Family annual income	Less than 2,000,000 JPY	11.6
	2,000,000 – 4,000,000 JPY	20.8
	4,000,000 – 6,000,000 JPY	23.4
	6,000,000 – 8,000,000 JPY	16.2
	8,000,000 – 10,000,000 JPY	12.3
	10,000,000 – 15,000,000 JPY	7.2
	15,000,000 – 20,000,000 JPY	3.9
	More than 20,000,000 JPY	2.1

TABLE II (CONT.)

SUMMARY OF JAPAN RESPONDENTS' DEMOGRAPHIC

Factor	Variables	Percent
Family members	1 member	27.8
	2 members	28.5
	3 members	23.8
	4 members	14.1
	5 members	4.2
	6 members or above	1.6
Household location	Tokyo	36.3
	Osaka	33.1
	Aichi	30.6

Note: JPY denotes Japanese yen, the official currency of Japan

B. *Data analysis*

The Smart-PLS program was used to measure the survey data. First, we computed the model to find the factor loading, discriminant validity, Cronbach's alpha, Rho_A, *P*-values, and *T*-statistic.

Factors loading

The factors loadings are removed one by one if the value is less than 0.7. The final results show in TABLE III.

Cronbach's alpha

Cronbach alpha is a coefficient of consistency that measures the internal surface of a test or scale. There are different reports on the acceptable values of alpha, ranging from 0.70 to 0.95. [25]. The high values of Cronbach's alpha indicate that the questionnaire provides high consistency. It means the item in each factor should represent a consistent score. The value of Cronbach's alpha (CR) results shows in TABLE III.

TABLE III

SUMMARY OF THAILAND RESPONDENTS' DEMOGRAPHICS

Factor	Variables	Factor loading	
		TH	JP
Information CRth=0.885 CRjp=0.887	INFO1: I check the certification before purchasing the organic products.	-	0.736
	INFO2: I compare information labels of the organic products to decide which brand to purchase.	-	0.714
	INFO3: I am concerned about additives or artificial flavoring on a label of the organic products.	-	-
	INFO4: I am concerned about the received nutrition in my daily diet.	-	-
	INFO5: I am concerned about the location/environment of the production of organic products.	-	0.756
	INFO6: Organic milk has more Omega 3 than conventional alternatives.	0.824	0.814
	INFO7: Organic milk has more Omega 6 than conventional alternatives.	0.837	0.779
	INFO8: Organic milk has more CLA (Conjugated Linoleic Acid) than conventional alternatives.	0.827	0.862
	INFO9: Organic milk has more calcium than conventional alternatives.	0.842	0.746
	INFO10: Organic milk is free of genetic modification.	0.707	-
	INFO11: Organic milk does not contain additives and artificial flavoring.	0.743	-
	INFO12: Organic milk is harmless and non-toxic.	-	-

TABLE III (CONT.)

SUMMARY OF THAILAND RESPONDENTS' DEMOGRAPHICS

Factor	Variables	Percent	
		TH	JP
COVID-19 CRth=0.751 CRjp=0.848	COVID1: COVID-19 makes me concerned about the health of my family.	0.668	0.764
	COVID2: COVID-19 has a positive effect on my willingness to buy healthier food.	0.788	0.893
	COVID3: COVID-19 has a positive effect on my willingness to pay more for healthier food	0.837	0.895
	COVID4: COVID-19 makes me want to buy agricultural products to support Thai farmers.	0.731	0.762
Social media CRth=0.809 CRjp=0.867	SM1: I see my friends often post/share health-related information on social media.	0.801	0.870
	SM2: I'm interested in health-related information on social media.	0.823	0.797
	SM3: I often post/share health-related information on social media.	0.802	0.888
	SM4: I follow health-related best practices on social media in my daily life.	0.764	0.826
Health concerns CRth=0.625 CRjp=0.558	HC1: I exercise every week regularly.	0.679	0.592
	HC2: I often eat healthy food.	0.857	0.671
	HC3: I want to live a healthy life as long as I can.	0.717	0.887
Attitude toward behavior CRth=0.878 CRjp=0.894	AB1: Organic milk is eco-friendly	0.766	0.907
	AB2: Organic milk is more beneficial to my health than conventional milk.	0.760	-
	AB3: Organic milk is essential to my health.	0.850	0.909
	AB:4 Organic milk satisfies /pleases me more than conventional milk.	0.860	0.786
	AB5: Organic milk is important for my daily life.	0.860	0.880
Subjective norms CRth=0.803 CRjp=0.840	SN1: My relatives suggest that I purchase more organic milk/food.	0.833	0.875
	SN2: My close friends and family consume organic milk/products.	0.868	0.874
	SN3: My loved ones expect me to purchase more organic milk/food for them.	0.840	0.862
Perceived behavioral control CRth=0.574 CRjp=0.724	PBC1: Only consumers with higher income can afford organic milk.	-	0.717
	PBC2: Buying organic milk is beyond my budget.	-	0.858
	PBC3: Organic milk is only available in limited stores/markets.	0.831	0.635
	PBC4: The stores where I frequently shop do not sell a variety of organic milk.	0.844	0.635
	PBC5: Buying organic milk is very inconvenient.	-	0.635
Willingness to purchase CRth=0.865 CRjp=0.917	WTP_1 I'm willing to buy organic milk even though choices are limited.	0.893	0.924
	WTP_2 I'm willing to pay more for organic milk.	-	0.919
	WTP_3 I'm willing to spend more time to find organic milk.	0.873	-
	WTP4: I would still buy organic milk even though conventional milk is on sale.	0.896	0.935

Note: TH: Thailand; JP: Japan; CRth: Cronbach's alpha of Thailand; CRjp: Cronbach's alpha of Japan; INFO: Information; HC: Health concerns; COVID: COVID-19; SM: Social media; AB: Attitude toward Behavior; SN: Subjective norms; PBC: Perceived behavioral control; WTP: Willingness to purchase organic fresh milk

Rho _A

For the Rho_A result from the program, the value could be above 0.7. Also, the Rho_A of each construct is shown in TABLE IV.

TABLE IV
RHO_A OF THAILAND AND JAPAN

Constructs	TH	JP
Attitude toward behavior	0.883	0.903
COVID-19	0.765	0.864
Health concerns	0.670	0.668
Information	0.888	0.889
Perceived behavioral control	0.574	0.867
Social media	0.811	0.871
Subjective norms	0.806	0.841
Willingness to purchase	0.865	0.918

TH: Thailand; JP: Japan

Discriminant validity

Discriminant validity requires a correlation between two constructs. The value of relationship in their factor (in itself column) must be the high number than different factors. The results' validity of Thailand is shown in TABLE V. and results' validity of Japan is shown in TABLE VI.

TABLE V
DISCRIMINANT VALIDITY OF THAILAND

FACTOR	AB	COVID	HC	INFO	PBC	SM	SN	WTP
AB	0.820							
COVID	0.679	0.758						
HC	0.527	0.617	0.755					
INFO	0.799	0.608	0.453	0.798				
PBC	0.309	0.280	0.166	0.359	0.837			
SM	0.682	0.659	0.515	0.615	0.239	0.798		
SN	0.753	0.688	0.482	0.701	0.254	0.692	0.847	
WTP	0.808	0.683	0.470	0.735	0.291	0.638	0.783	0.888

Note: INFO: Information; HC: Health concerns; COVID: COVID-19; SM: Social media; AB: Attitude toward behavior; SN: Subjective norms; PBC: Perceived behavioral control; WTP: Willingness to purchase organic fresh milk

TABLE VI
DISCRIMINANT VALIDITY OF JAPAN

FACTOR	AB	COVID	HC	INFO	PBC	SM	SN	WTP
AB	0.872							
COVID	0.694	0.831						
HC	0.610	0.621	0.723					
INFO	0.851	0.698	0.579	0.774				
PBC	-0.214	-0.170	-0.257	-0.156	0.655			
SM	0.599	0.547	0.529	0.566	-0.240	0.846		
SN	0.706	0.671	0.582	0.686	-0.318	0.764	0.870	
WTP	0.866	0.701	0.597	0.770	-0.303	0.621	0.743	0.926

Note: INFO: Information; HC: Health concerns; COVID: COVID-19; SM: Social media; AB: Attitude toward behavior; SN: Subjective Norms; PBC: Perceived behavioral control; WTP: Willingness to purchase organic fresh milk

T-statistics

T-statistics are regression parameters computed by bootstrapping the program. The result of the analysis shows whether the hypothesis has been accepted or rejected, as shown in TABLE VII.

TABLE VII
T-STATISTIC OF THAILAND AND JAPAN

Hypothesis	Path	TH	Result	JP	Result
H1	WTP → AB	8.592***	Accepted	23.169***	Accepted
H2	WTP → SN	7.089***	Accepted	6.825***	Accepted
H3	WTP → PBC	1.158	Rejected	3.745***	Accepted
H4	AB → INFO	15.188***	Accepted	16.393***	Accepted
H5	AB → HC	2.451*	Accepted	3.723***	Accepted
H6	AB → COVID	5.784***	Accepted	3.013**	Accepted
H7	SN → SM	24.986***	Accepted	32.633***	Accepted

Note: 1) INFO: Information; HC: Health concerns; COVID: COVID-19; SM: Social media; AB: Attitude toward behavior; SN: Subjective norms; PBC: Perceived behavioral control; WTP: Willingness to purchase organic fresh milk. 2) *0.05 significance level; **0.005 significance level; ***0.001 significance level

V. CONCLUSION

A study comparing intention factors regarding willingness to purchase organic fresh milk between Thailand and Japan showed that attitude toward behavior and subjective norms are associated with willingness to purchase organic milk. In addition, information labeling also has a strong influence on consumer perception. Owing to the COVID-19 pandemic, consumption of healthy products and observation of a health concerns are positive effects and are linked to the purchase of organic fresh milk. Furthermore, social media also affects subjective norms correlated with buying organic fresh milk. However, perceived behavioral control regarding willingness to purchase organic fresh milk in Thailand was shown not to be significant, whereas in Japan it is.

Moreover, cultural differences contribute to differences in the development of perceived behavioral control. Therefore, we suggest promoting organic fresh milk on social media. Furthermore, marketing companies and manufacturers can optimize the production process to increase production, which is suitable for further developing organic fresh milk systems such as smart organic farming.

REFERENCES

[1] J. Wohlers and P. Stolz, "Differentiation between milk from low-input biodynamic, intermediate-input organic and high-input conventional farming systems using fluorescence excitation spectroscopy (FES) and fatty acids," in *Biological Agriculture & Horticulture*, vol. 35, pp. 172–186, 2019.

[2] T. Washio, T. Ohashi and M. Saijo, "What Promotes Intention? Factors Influencing Consumers' Intention to Purchase Animal-Welfare Friendly Beef in Japan," Lecture Notes in Communications in Computer and Information Science: Proceedings of The International Joint Conference on Knowledge Discovery 2019, Sept. 10–17, 2019, San Francisco, Austria, pp. 536–549.

[3] S. Paopid, J. Tang, and N. Leelawat, "Willingness to pay for flood insurance: a case study in Phang Khon, Sakon Nakhon Province, Thailand," Lecture Notes in IOP Conference Series Earth and Environmental Science: Proceedings of The International Conference on Water Resource and Environment, vol. 612, 2020.

[4] E. Dogan and I. Muhammad, "Willingness to pay for renewable electricity: A contingent valuation study in Turkey," *The Electricity Journal*, vol. 32, no. 10, pp. 40–347, 2019.

[5] I. Ajzen, "The theory of planned behavior," *Organizational Behavior and Human Decision Processes*, vol. 50, no. 2, pp. 179–211, 1991.

[6] A. Chareonpanich and R. Vongurai, "The Factors Affecting Healthy Lifestyle and Attitude Towards Organic Foods: A Case Study of People Living in Bangkok, Thailand," *ABAC ODI JOURNAL Vision. Action. Outcome*, vol. 5, no. 1, pp. 102–116, 2018.

[7] P. Pomsanam, K. Napompech and S. Suwanmaneepong, "Factors Driving Thai Consumers' Intention to Purchase Organic Foods," *Asian Journal of Scientific Research*, vol. 7, pp. 434–446, 2014.

[8] K. Zhang, "Theory of planned behavior:Origins, development and future direction," *International Journal of Humanities and Social Science Invention*, vol. 7, no. 5, pp. 76–83, 2018.

[9] E. J. Van Loo, M. Nguyen Hoang Diem, Z. Pieniak and W. Verbeke, "Consumer attitudes, knowledge, and consumption of organic yogurt," *Journal of Dairy Science*, vol. 96, no. 4, pp. 2118–2129, 2013.

[10] A. J. Dubinsky and B. Loken, "Analyzing ethical decision making in marketing," *Journal of Business Research*, vol. 19, no. 2, pp. 83–107, 1989.

[11] L. Zagata, "Consumers' beliefs and behavioural intentions towards organic food. Evidence from the Czech Republic," *Appetite*, vol. 59, no. 1, pp. 81–89, 2012.

[12] M. H. Johe and N. Bhullar, "To buy or not to buy: The roles of self-identity, attitudes, perceived behavioral control and norms in organic consumerism," *Ecological Economics*, vol. 128, pp. 99–105, 2016.

[13] M. Guilabert and J. A. Wood, "USDA Certification of Food as Organic: An Investigation of Consumer Beliefs about the Health Benefits of Organic Food," *Journal of Food Products Marketing*, vol. 18, no. 5, pp. 353–368, 2012.

[14] J. Aschemann-Witzel, N. Maroscheck, and U. Hamm, "Are organic consumers preferring or avoiding foods with nutrition and health claims?," *Food Quality and Preference*, vol. 30, no.1, pp. 68–76, 2013.

[15] H. S. Gopalan and A. Misra, "COVID-19 Pandemic and Challenges for Socio-economic Issues, Healthcare and National Programs in India," *Diabetes & Metabolic Syndrome: Clinical Research & Reviews*, vol. 14, no. 5, pp. 757–759, 2020.

[16] D. Surgenor, L. Hollywood, S. Furey, F. Lavelle, L. McGowan, M. Spence, M. Raats, A. McCloat, E. Mooney, M. Caraher and M. Dean, "The impact of video technology on learning: A cooking skills experiment," *Appetite*, vol. 114, no. 1, pp. 306–312, 2017.

[17] G. V. Pham, M. Shancer and M. R. Nelson, "Only other people post food photos on Facebook: Third-person perception of social media behavior and effects," *Computers in Human Behavior*, vol. 93, pp. 129–140, 2019.

Jeerawan Punwaree was born on August 22, 1989, in Chiangmai, Thailand. She received her B.Eng. degree in industrial engineering from Chiangmai University, Thailand, in 2012. She is currently a master's student with the Department of Industrial Engineering, Faculty of Engineering, Chulalongkorn University, Thailand. She is also a member of the Disaster and Risk Management Information Systems Research Group, Chulalongkorn University. She is interested in green products, marketing, sustainability, and industrial improvement.

Natt Leelawat (M'14) received his B.Sc. (1st Class Honors) degree in information technology from Sirindhorn International Institute of Technology, Thammasat University, Thailand; and M.Eng. and D.Eng. degrees in industrial engineering and management from Tokyo Institute of Technology, Japan, in 2007, 2013, and 2016, respectively. He was a System Analyst with the Bank of Thailand; and an Assistant Professor with Tohoku University, Japan. He is currently an Assistant Professor with the Department of Industrial Engineering, Faculty of Engineering, Chulalongkorn University, Thailand. He is also a Director of the Risk and Management Program, Graduate School; Assistant Dean of Faculty of Engineering; and Head of Disaster and Risk Management Information Systems Research Group, Chulalongkorn University. He is a senior member of IEEE and a member of ACM. His research interests include management information systems, disaster and risk management, and business continuity management.

Jing Tang (M'14) received her B.Mgmt. degree in industrial engineering; a B.Eng. in computer science and technology from Xi'an Jiaotong University, China; and M.Eng. and D.Eng. degrees in industrial engineering and management from Tokyo Institute of Technology, Japan, in 2008, 2010, and 2013, respectively. She was a lecturer with Sirindhorn International Institute of Technology, Thammasat University, Thailand. Currently, she is a lecturer in the Robotic and Artificial Engineering Program and Information and Communication Engineering Program of the International School of Engineering, Faculty of Engineering, Chulalongkorn University, Thailand. She is a member of IEEE and ACM. Her research interests include data science and data analytics, business intelligence and artificial intelligence, business process management, business process outsourcing, and simulation and modeling.

Ampan Laosunthara received his B.Eng. degree in Electrical and Electronic Engineering and an M.Eng. degree in Nuclear Engineering from Tokyo Institute of Technology, Japan, in 2011 and 2015, respectively. He is a researcher with the Disaster and Risk Management Information Systems Research Group, Chulalongkorn University, Thailand.

Takumi Ohashi received his B.E., M.E. and Ph.D. degrees in electrical engineering from the Tokyo Institute of Technology (Tokyo Tech), Japan, in 2014, 2015, and 2018, respectively. He also received his Master of Management of Technology (MOT) from Tokyo Tech in 2018. He is currently an Assistant Professor at Tokyo Tech. He was a Visiting Assistant Professor at Center for Design Research, Stanford University, USA, in AY2019–2020. He is currently engaged in "Human-centered Design" to research and develop technologies together with stakeholders through dialogue and collaboration in a wide range of fields such as livestock breeding, nursing care, education, food, drug discovery, and disaster evacuation, and to transform practices in the field.