Harmonic Emission Limits and Selecting PCC Location Based on the Type of Distribution System

George Eduful, *Member, IAENG* Ebenezer A. Jackson, and Joseph Ekow Cole

Abstract— **In this paper, two major international standards on harmonic emissions in power systems have been reviewed. The purpose is to help utility companies and stakeholders take informed decision regarding the safe limit of harmonic emissions and decide on which standard to adopt. The paper describes the principles underlying the original intent of PCC and clarifies some difficulties in relation to application of the standards. It is shown that location of PCC can be selected based on the method of power distribution system.**

***Index Terms*—Point of Common Coupling, Harmonic Emission, IEEE-519, IEC-61000 Series, Total Harmonic Distortion, HVDS, LVDS.**

I. Introduction

In Ghana, UK harmonic standard G5/4 is recommended for use [1]. The standard is essentially adoption of the IEC 61000 series. However, in practice, the harmonic emission limits are not being enforced. This is perhaps due to misunderstanding on certain aspects of the standards. Point of Common Coupling (PCC) is not clearly defined − which side of the service transformer constitutes PCC is not known. Harmonic measurements are done in customer's premises and where limits are considered high, consumers are advised to reduce their harmonic distortion to 5% per the Electricity Company of Ghana (ECG) design guidelines [1]. Clearly, it can be seen that the PCC, as against the original intention of IEEE 519 [2], has been misunderstood and being wrongly applied. It is not even clear whether the recommended 5% distortion limit refers to voltage or current. Consumers do not even know level of harmonic current that is safe to operate with. As a result, capacitor banks are failing and consumers are ignorantly blaming utility companies for the failures [3]. From personnel communications with colleagues in the profession (from other Africa countries in IEEE fraternity), it appears that the situation is almost the same. Therefore, the main intent of this paper is to add to the stock of knowledge in harmonics and help clarify some of the difficulties in relation to application of harmonic standards. The paper discusses IEEE and IEC standards on harmonic emission limits and select location of PCC based on the method of power distribution system. It is hoped that the paper will serve as educative material on harmonic standards and help utility companies and stakeholders take informed decision regarding safe harmonic emission limits and decide on which standard to adopt.

Manuscript received February 22, 2014; revised April 5, 2014. This work was supported in part by the Electricity Company of Ghana.

G. Eduful is with the Electricity Company of Ghana, System Planning Division, Project Office, Box AN 5278, Accra-North, Ghana.Tel: +233246132736. georgeeduful@yahoo.com

Ebenezer A Jackson is with Jackson Educational Complex, Teacher Training Department. 115 Ayeduase Road, Kumasi-Ghana. e-mail: jacksonea1@yahoo.com

J. E. Cole is with Electricity Company of Ghana, Ashanti East Region - Kumasi. Box 1980, Kumasi-Ghana. email: Josephekowcole@gmail.com.

II. Harmonic Theory

A. Mathematical representation of harmonics

Harmonics are sinusoidal voltages and currents with frequencies that are integral multiplies of the fundamental frequency that is 50 or 60 Hz in a typical power system. This can be expressed mathematically as

$$f_h = h \times f \tag{1}$$

where h denotes the order of the harmonic (h=1,2,3,....n), f is the fundamental frequency of the harmonic. The harmonic order 1 refers to the fundamental frequency.

Mathematically, harmonic currents can be expressed as follows:

$$i_h = I_{DC} + \sum_h^n \sqrt{2} I_h \sin(2\pi f h + \delta_h) \tag{2}$$

where δ_h is the phase angle of the harmonic current and I_{DC} is the direct component of the current (does not exist always). The equation of the harmonic voltages has the same form, but the current is replaced with voltage.

B. Harmonic Distortions and their Measurement

Total harmonic distortion (THD) and total demand distortion (TDD) are two most common indices that are used to quantify harmonic distortion in power systems [4]. They are well defined in standards such as IEEE 519-1992 and IEC 61000-series [5][6].

The THD value is the effective value of all the harmonics current or voltage added together, compared with the value of the fundamental voltage or current. Although many of today's test and measurement instruments can provide THD values, it is still important to understand the calculation that derives THD. The basic equation is as follows [7] [8]:

$$THD_U = \frac{1}{U_1}\sqrt{\sum_{h=2}^{\infty} U_h^2} = \sqrt{\left(\frac{U_{rms}}{U_{1rms}}\right)^2 - 1} \tag{3}$$

where THD_U represents voltage or current total harmonic distortion (alternatively represented as TDH_V and TDH_I

ISBN: 978-988-19252-7-5
ISSN: 2078-0958 (Print); ISSN: 2078-0966 (Online)

respectively) and Urms is the rms fundamental voltage or current.

Alternatively, rms voltage or current can be represented in terms of total harmonic distortion as given below.

$$U_{rms} = \sqrt{\sum_{h=1}^{\infty} U_{hrms}^2} = U_{1rms}\sqrt{1+THD_U^2} \qquad (4)$$

As distribution system fundamental voltage and current rarely remain static in magnitude at different times throughout the day, the definition of total harmonic distortion may at times provide a misleading value for the harmonic distortion level [8]. This is especially true for distribution system fundamental currents that fall close to zero at certain periods of the day, resulting in a large value of THD_I. For this reason, a modified index for harmonic distortion is used with harmonic content of the waveform expressed as a percentage of a fixed nominal value rather than the fundamental value. The modified index is referred to as total demand distortion (TDD). The TDD is very much like the total harmonic distortion THD. The only difference is that the TDD calculation compares the measured harmonics with the maximum demand current. Similarly, the individual harmonic current limits are not given in terms of percent of fundamental. Mathematically, TDD is expressed as:

$$TDD_U = \frac{1}{U_{nom}}\sqrt{\sum_{h=2}^{\infty}\frac{1}{\sqrt{2}}U_h^2} \qquad (5)$$

The difference between THD and TDD is important because it prevents a user from being unfairly penalized for harmonics during periods of light load. During periods of light load, it can appear that harmonic levels have increased in terms of percent even though the actual harmonic currents in amperes have stayed the same or decreased [9].

C. Effect of Harmonic Distortions

Harmonics have a number of undesirable effects on power system components and loads. The effects can be overheating of transformers, cables, motors, generators and capacitors connected to the same power supply with the devices generating the harmonics. Electronic displays and lighting may flicker, circuit breakers can trip, computers may fail and metering can give false readings [10]. According to [11] when the level of distortion in the supply voltage approaches 10%, the duration of the service life of equipment significantly reduced. According to [12], service life of equipment reduction has been estimated at 32.5% for single-phase machines, 18% for three-phase machines and 5% for transformers. Some computer-controlled are also reported in literature to be sensitive to voltage distortion of 5% [13].

III. Standards on Harmonic Emissions

In order to prevent harmonics from negatively affecting equipment of utilities and their customers, nationals and international standards have been established on limit on harmonic emissions. The IEEE 519-1992 and IEC 61000-series are two major international standards on harmonics that are widely used. This section discusses IEEE and IEC recommended practices and requirement for harmonic limits in power transmission and distribution systems.

A. IEEE Standard 519

IEEE Standard 519 was introduced in 1981 and was revised in 1992. The standard clearly established limits for both voltage and current distortion and it was intended to provide direction on dealing with harmonics introduced by static power converters and other nonlinear loads. The underlying philosophy of the standard is that [5]:

1. Customers should limit harmonic currents, since they have control over their loads,
2. Electric utilities should limit harmonic voltages since they have control over the system impedances.

Both parties share the responsibility for holding harmonic levels in check.

The standard restricts customer harmonic current emissions to a value derived from a short circuit level at the point of common coupling (PCC) and the size of customer's nonlinear load. The standard takes into account the total demand distortion, which is the harmonic distortion of current expressed as a percentage of the maximum demand current (15 or 30 minutes demand). Limit of current distortion depend on the size of the load compared with the size of the supply system at the PCC.

The recommended harmonic current limits from IEEE 519 are given in Table 1. The limits are intended to be applied at the point of common coupling between the customer and the utility. Within the customer's facility these limits do not apply, but they are still useful guides for judging harmonic levels within the customer's facility [9].

Table I
Current Distortion Limits (in % of IL) for General Distribution Systems (120-69,000V) [ ]

Isc/I_L	<11	11≤h<17	17≤h<23	23≤h<35	35≥h	TDD
<20	4	2	1.5	0.6	0.3	5
20-50	7	3.5	2.5	1	0.5	8
50-100	10	4.5	4	1.5	0.7	12
100-1000	12	5.5	5	2	1	15
>1000	15	7	6	2.5	1.4	20

Where I_{SC}: Available short circuit current, IL: 15 or 30 minute (average) maximum demand current. TDD: Total demand distortion. TDD is identical to THD except I_L (as defined previously) is used instead of the fundamental current component.

Table 1 defines Total Demand Distortion (current) limits as well as individual harmonic current limits. The limits are most severe for short circuit ratios of less than 20 because this lower ratio indicates a high impedance power system or a large customer or both. Voltage distortion is more likely to develop from current harmonics consumed at a PCC where the short circuit ratio is low, thereby justifying the more severe limits.

It is important to note that Table 1 shows limits for odd harmonics only. IEEE 519 addresses even harmonics by limiting them to 25% of the limits for the odd orders within the same range [5]. Even harmonics result in an asymmetrical current wave which may contain a dc component that will saturate magnetic cores.

The distortion limits given above are only permissible provided that the transformer connecting the user to the

ISBN: 978-988-19252-7-5
ISSN: 2078-0958 (Print); ISSN: 2078-0966 (Online)

utility system will not be subjected to harmonics in excess of 5% of the transformer's rated current as stated in ANSI/IEEE C57.12.00-1980 [14]

The second set of criteria established by IEEE 519 is for voltage distortion limits. This governs the amount of voltage distortion that is acceptable in the utility supply voltage at the PCC with a consumer. The harmonic voltage limits recommended are based on levels that are low enough to ensure that consumers' equipment will operate satisfactorily.

Based on the harmonic current limit given in Table 1, it is assumed that the voltage levels will not exceed those given in Table 2. Any consumer who degrades the voltage at the PCC would be expected to take steps to correct the problem. However, the problem of voltage distortion is one for the entire community of consumers and the utility [5].

As can be seen, the IEEE standard 519 establishes harmonic limits on voltage as 5% for total harmonic distortion and 3% of the fundamental voltage for any single harmonic.

Table II
Voltage Distortion Limits (in % of V_1)

PCC Voltage	Individual Harmonic Magnitude (%)	THDv
≤69kV	3	5
69-161kV	1.5	2.5
≥161kV	1	1.5

It should be noted that even if the voltage distortion limits are met at the PCC, they could very easily be exceeded downstream where connected equipment could be affected. Since voltage distortion is the result of harmonic currents passing through the impedance of the power system, voltage distortion will always be higher downstream where the harmonic currents are generated and where system impedance is highest.

This standard also recognizes the sensitivity of electrical equipment in a building as the limiting factor on how much voltage distortion is acceptable. IEEE 519 therefore provides limits for different types of buildings.

B. Some Misinterpretations in the Application of the IEEE 519-1992

One of the most difficult aspects to applying IEEE standard 519 is determining the location of the Point of Common Coupling or PCC. The standard defines the PCC as the electrical connecting point or interface between the utility distribution system and the customer's electrical distribution system. The concept of PCC has been used to define this point but unfortunately, the existing standard has not provided a clear definition. While simple in concept, identification of this point is sometimes misunderstood; this leads to confusion and misapplication of the specifications in the Table 1.

The single-line diagram shown in Fig. 1 represents a small distribution system. Limit of harmonic current distortions to be allowed depends on the size of the load compared with the short circuit power of system at the PCC. By the IEEE definition, the PCC can either be located at the primary side of the transformer (PCC-1) or at the secondary side of the transformer (PCC-2). However, consulting engineers have often resorted to applying the standard on an individual equipment basis [2] by insisting that the current harmonic limits be met at the terminals of the non-linear equipment. It should be noted that high distortion at PCC3 does not necessarily result in out-of-limit distortion on the distribution system.

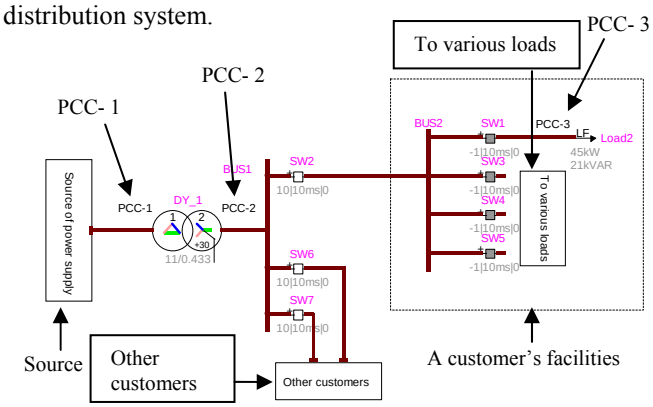

Fig 1, The single-line diagram of a small distribution system

It should be noted that IEEE 519-1992 is meant to be applied to system harmonic distortion rather than to individual load distortion. The most effective way to meet harmonic distortion limits is to filter the harmonics at each individual load and measure them at the selected PCC [15].

C. IEC Standard on Limit on Harmonic Emissions

The International Electro-technical Commission (IEC) presents standards on electromagnetic compatibility in several publications that cover many disturbing electrical phenomenon. In relation to harmonic current emissions, the IEC standards deal with three different publications: two concern emissions in LV network and one concerns emission in MV and HV networks [8].

IEC 61000-3-2 and IEC 61000-3-4: Harmonic Emission in LV Networks

The relevant standards in the LV networks are IEC 61000-3-2 and IEC 61000-3-4 [16]. The IEC 61000-3-2 considers emissions in LV network of equipment whose input current is less than 16A. With such equipment, the task of reducing harmonic current is entrusted to the equipment manufacturer. The manufacturer has the responsibility to manufacture equipment with emission levels within the standard limits. It should be noted that the standard does not take into account the size of the system at the point of common coupling as proposed in the case of the IEEE 519.

For the purpose of harmonic current limitation under IEC 61000-3-2, equipment are classified into 4 classes as follows:

Class A: refers to balanced three-phase equipment, household equipment, tools (excluding portable tools), dimmers and audio equipment.
Class B: refers to portable tools and arc welding equipment which is not professional equipment.
Class C: refers to lighting equipment.
Class D: refers to personal computers and personal

ISBN: 978-988-19252-7-5
ISSN: 2078-0958 (Print); ISSN: 2078-0966 (Online)

computer monitors and television receivers having a rated input current less than or equal to 600W.

The applicable limits in relation to the above classes can be found in [16].

The IEC 61000-3-4 deals with equipment with input current higher than 16A, connection of the equipment to the supply system needs either notification or consent of the supply authority. The standard shows three stages of assessment for the purposes of making such connection. These stages are based on the magnitude of the admissible harmonic current caused by the equipment [17]. The recommended emission limit for equipment with input current higher than 16A is given in [16].

IEC 61000-3-6: Harmonic Emission in MV and HV networks

IEC 61000-3-6 relates to emissions in MV and HV networks. The standard ensures that allocation of harmonic emission rights to customers is more equitable [8]. In 2001, Australia and New Zealand adopted the standard and by government regulation, transmission utilities and connected loads are required to abide by the harmonic allocations set by the standard [8]. A key concept is that customers with the same maximum demand and at the same PCC are entitled to equal harmonic emission rights.

Central to the implementation of the standard is the concept of agreed power Si, a number which describes the size of a particular consumer load. A premise of the standard is that every consumer at the same point of common coupling and having the same agreed power has the right to draw equal distorted current from the supply [18]. Assuming harmonic voltage Gh is available for distribution to all connected and potential future consumers, a strategy is used to allocate a portion of Gh to each consumer to satisfy the equal rights criterion and to take up Gh fully when the supply is fully loaded. For equitable right, the standard uses two summation laws [18]. The second law, also known as the power law, is more general and would be used to explain the equitable right concept of the standard.

IEC 6100-3-6 assumes that the harmonic voltage at the MV level is a combination of the emission from loads and the background distortion of the HV transmission system [8]. Thus HV harmonic planning level L_{hHV} must be included in the MV harmonic voltage planning level L_{hMV}. Harmonic planning levels as suggested by the standard is given in [8] [18].

Example

Suppose the supply capability of the MV substation is St, see Fig 2. Let the planning levels at the hth harmonic for the HV and MV buses be L_{hHV} and L_{hMV} respectively. The global harmonic voltage available for MV loads can be estimated using equation (6)

$$G_{hMV} = \left(L_{hMV^{\alpha}} - L_{hHV}^{\alpha}\right)^{\frac{1}{\alpha}} \qquad (6)$$

Where α is dependent on a harmonic order and is given in Table 3.

Table III
Summation exponents

Harmonic order	α
h<5	1
5 h 10	1.2
h>10	2

Harmonic voltage is to be allocated to a customer with maximum demand Si such that the sum of all allocated harmonic voltages is G_{hMV}. According to the standard [19], this can be achieved by choosing the hth harmonic voltage emission level of customer "i" to be

$$E_{Uhi} = G_{hMV}\left(\frac{S_i}{S_t}\right)^{\frac{1}{\alpha}} \qquad (7)$$

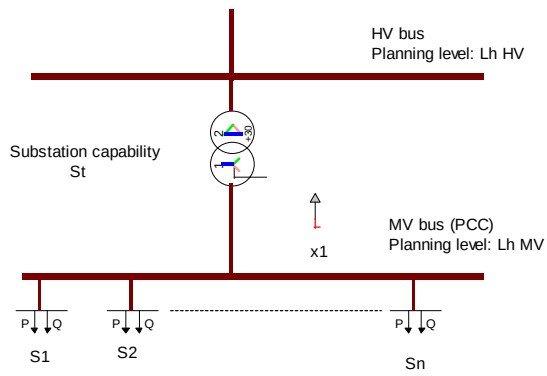

Fig 2, A Simple Distribution System

Let the fundamental supply system impedance seen at the PCC (point of common coupling) be x_1. Assuming this impedance at the hth harmonic is hx1 gives a harmonic current emission level of

$$E_{Ihi} = \frac{E_{Uhi}}{hx_1} \qquad (8)$$

As can be seen, the standard makes a logical sense and easy to apply. The harmonic voltage is first allocated to the customer and an equivalent harmonic current calculated.

Although the standard encourages an equitable allocation of harmonic 'right' to all customers having the same maximum demand, where customers see different fault levels the question arises as to whether these rights are to equal harmonic voltage, equal harmonic current or some other right. Other difficulties found in applying the standard has to do with determination of planning levels for specific power systems [8][18][19]

IV. Views and Comments on the Harmonic Emission Standards

Having reviewed the two major standards on the harmonic emission limits, we now compare and present our views on the standards.

The IEEE 519 standard determines the limit of harmonic emission based on a ratio of system short-circuit current and maximum demand of a consumer at the point of common

ISBN: 978-988-19252-7-5
ISSN: 2078-0958 (Print); ISSN: 2078-0966 (Online)

coupling (PCC). The method is applicable to low voltage, medium voltage or high voltage networks in determining limits on harmonic emission. The task of reducing the harmonic emission is entrusted to both the utility and the consumer. The utility ensures that the voltage is clean at the PCC whereas the consumer ensures that he does not inject harmonic current that could denigrate or distort the voltage wave at the PCC.

The IEC basically has three standards on the limit of harmonic emissions. IEC 61000-3-2 and IEC 61000-3-4 are harmonic emission standards for equipment in a low voltage network whereas IEC 61000-3-6 is harmonic emission standard for MV and HV networks.

The IEC 61000-3-2 is a standard for equipment with rated input current up to 16A. Here, the task of reducing the harmonic emission is the responsibility of the manufacturer. The manufacturer is expected to manufacture the equipment within harmonic emission limits given in the standard. The IEC 61000-3-4 is a harmonic standard for low equipment with rated input current higher than 16A. Harmonic emission limits for this equipment are also set in the standard for manufacturers. However, one needs the consent of the utility to connect this type of equipment to the network. It should be noted that, unlike the IEEE 519 which make reference to short circuit ratio at the PCC, the IEC standards for equipment in the low voltage network do not make reference to the system parameters.

As stated above, the IEC 61000-3-6 is harmonic emission standard for MV and HV networks. The philosophy of the standard is that the allocation of harmonic emission rights to customers should be equitable. The standard uses a power law based on global planning harmonic voltage level at PCC to allocate harmonic emission level to customers. The IEC 61000-3-6 is comparable to the IEEE 519 as it also uses system parameter in the form of harmonic voltage planning level derived from the system.

The IEEE 519 is just a guide and recommended practice and not binding by law unless incorporated in tender documents. However, the IEC standards have been widely adopted by European countries and enforceable by government regulations.

In practice, there appears to be misunderstanding and confusion regarding the point of common coupling. This confusion seems to be common to both the IEEE and IEC 61000-3-6. It looks the standards are deliberating giving the utilities the discretional power to define their own PCC as PCC could either be at the low voltage or high voltage side of a network.

The IEEE 519 seems not to provide a definite harmonic emission limit internal to the consumer as the compliance of harmonic emission is observed at the point of common coupling. It is possible that internally, a consumer will be injecting high harmonic levels but will still not be violating IEEE limit at the PCC. In such situation, the consumer may risk damaging his equipment from high harmonic injections. In the case of the IEC, standard 61000-3-2 and 61000-3-4 may be protecting the consumer's equipment from high harmonic emissions since the equipment by standards are limited to certain harmonic emission by the manufacturer.

V. Recommended Solutions

The existing standards have not provided a clear definition on the PCC. According to [2], two definitions are provided: the first has been found to be too ambiguous to be effectively applied on a consistent basis. Therefore, the 519 Working Group has provided a second definition. The second definition, according to [2], is more precise in that it stipulates that the PCC is 'the closest point on the utility side of the customer's service where another utility customer is or could be supplied'

It is our view that the second definition is still ambiguous. The application of the PCC should depend on the method of distribution system being used. Generally, there are two methods of distribution systems: High Voltage Distribution System (HVDS) and Low Voltage Distribution System (LVDS).

Locating PCC in HVDS

Figure 3 represents a simple single line diagram of a HVDS. As can be seen, with the HVDS smaller unit distribution transformers are densely populated on a medium voltage distribution network. To decide which point on the HVDS to apply the PCC, the general principle behind the IEEE standard 519 should be understood. According to the standard, the harmonic limits were intended to be applied at the point where a high level of harmonics generated by one customer could distort the power system to a level that might affect other customers on the power grid. From this standpoint, a node on the HVDS which when distorted could affect more customers is the high voltage side of the unit transformers. Therefore, to meet the requirement of the IEEE 519, the PCC should be located at the high voltage side of transformers in HVDS.

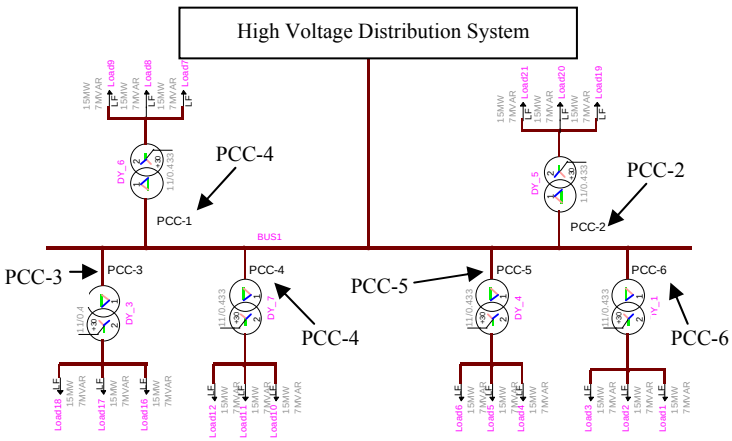

Fig 3, A High Voltage Distribution System

Besides meeting the IEEE 519 requirement at the PCC, it is possible that harmonic currents at the secondary side of the transformers could push the utility into providing a larger transformer due to increased losses and overheating. This could be handled by setting harmonic limit at the low voltage side of the transformers. This situation can only be considered as additional measures by the utility to control power losses due to harmonics and not necessarily meeting the IEEE 519 requirement.

ISBN: 978-988-19252-7-5
ISSN: 2078-0958 (Print); ISSN: 2078-0966 (Online)

Locating PCC in LVDS

Low Voltage Distribution System (LVDS) employs larger size transformers and are used to serve all kinds of customers. Figure 4 shows a single diagram of LVDS. As can be seen, the customers are concentrated at the low voltage side of the transformer. Therefore, to ensure that a customer with a disturbing harmonic load does not distort the voltage for other customers, the spirit of the IEEE 519 will be met when the PCC is located at the secondary side of the transformer. In this case, the utility derive other benefits such reduction in system losses and protecting the transformer from overheating.

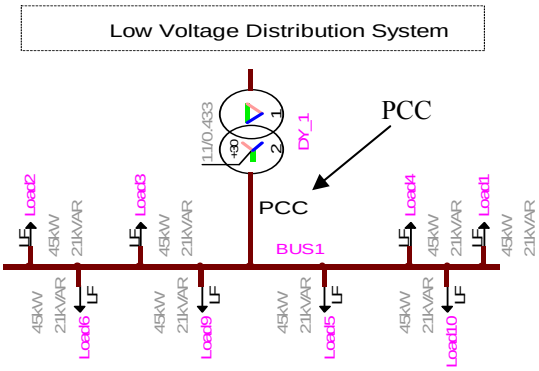

Fig 4, A Low Voltage Distribution System

VI. Conclusion

Two major international standards on harmonic emissions in power systems have been reviewed. The IEEE and IEC point of common coupling (PCC) definition has been interpreted in different ways—some leading to ineffective and misapplication of the standards. The paper described the principles underlying the original intent of PCC and clarified some difficulties in relation to application of the standards. It was shown that location of PCC can be selected based on the method of power distribution system. It is hoped that the paper will serve as educative material on harmonic standards and help utility companies and stakeholders take informed decision regarding safe harmonic emission limits and decide on which standard to adopt.

References

[1] Electricity Company of Ghana-Ghana Energy Development & Access Project (GEDAP)Distribution Planning Manual,2012

[2] Tony Hoevenaars et al, May 6, 2003: Interpreting IEEE Std 519 and Meeting its Harmonic Limits in VFD Applications. Online source. Date accessed 4th January, 2014. Available at http://www.mirusinternational.com/downloads/Interpreting-IEEE-Std-519-and-Meeting-Harmonic-Limits-VFDs-PCIC-2003-15.pdf

[3] George Eduful et al, 2013: Investigating Damaged Capacitor Bank at a Quarry Processing Plant. Proceedings of the World Congress on Engineering 2013 Vol II, WCE 2013, July 3 - 5, 2013, London, U.K.

[4] Haroon Farooq et al, 2012 : Analyzing the Harmonic Distortion in a Distribution System Caused by the Non-Linear Residential Loads. Pp 46-51.

[5] IEEE Std. 519-1992. IEEE Recommended Practices and Requirements for Harmonic Control in Electrical Power Systems.

[6] T J. Browne et al, 2006: Experience in the application of IEC/TR 61000-3-6 to harmonic allocation in transmission systems.41st International Conference on Large High Voltage Electric Systems 2006, CIGRE 2006, 2006,

[7] Kalle Rauma, 2012: Electrical Resonances and Harmonics in a Wind Power Plant. Master of Science Thesis in Technology Espoo, Finland 17th February 2012 Aalto University School of Electrical Engineering

[8] Duane Robinson, 2003: Harmonic Management in MV Distribution Systems. PhD Thesis 2003. University of Wollongong.

[9] Thomas M. Blooming and Daniel J. Carnovale, 2006: Application of IEEE STD 519-1992 Harmonic Limits. Presented at the 2005 IEEE IAS Pulp and Paper Industry Conference In Appleton.

[10] Power Quality Technical Application Guide. Online source, date accessed 12th November, 2013. available at www.gentec.ca/stock/fra/power-quality-technical-application-guide.pdf

[11] Harmonic Management. Online source, date accessed 17th October, 2013. Available at www.schneider-electric.com.au/.../EIG-M-harmonic-management.pdf

[12] Effects of harmonics - Economic impact. Online source, date accessed 23rd October, 2013. Available at http://www.electrical-installation.org/enwiki/Effects_of_harmonics_-_Economic_impact

[13] W. Mack Grady and Surya Santoso, 2001: Understanding Power System Harmonics . September 1, 2001

[14] Voltage And Current Harmonics & IEEE 519 Standard Online source, date accessed 3rd June, 2013. Available at energylogix.ca/harmonics_and_ieee.pdf

[15] John F. Hibbard Michael Z. Lowenstein Meeting IEEE 519- 1992 Harmonic Limits - Using Harmonic Guard Passive Filters Trans-Coil, Inc.

[16] Electromagnetic Compatibility (EMC) Low-Frequency Standards. Online source, date accessed 5th January, 2014. available at www.dsce.fee.unicamp.br/~antenor/pdffiles/IEC.pdf

[17] Regina Lamedica et al, 1999: Analysis of Harmonic Distortion Limits in IEC and IEEE standards. Electrical Power Quality and Utilization, Vol V No.2

[18] V. J. Gosbell1 et al A Review of The New Australian Harmonics Standard AS/NZS 61000.3.6. Online source, date accessed 11th January, 2014. available at http://www.elec.uow.edu.au/apqrc/content/papers/AUPEC/AUPEC99_1.pdf

[19] T.J. BROWNE et al, CIGRE 2006 : Experience In The Application of IEC/TR 61000-3-6 To Harmonic Allocation In Transmission Systems. CIGRE 21, rue d'Artois, F-75008 PARIS, C4-401. http : //www.cigre.org

[20] Application of IEEE Std 519- 1992 Harmonic Limits. Online source, date accessed 7th October, 2013. Available at www. ewh.ieee.org/r3/atlanta/ias/IEEE_519.pdf

ISBN: 978-988-19252-7-5
ISSN: 2078-0958 (Print); ISSN: 2078-0966 (Online)